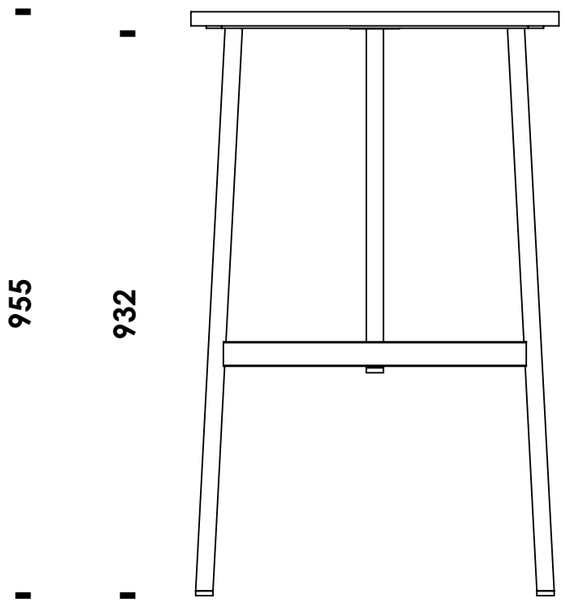
955
932

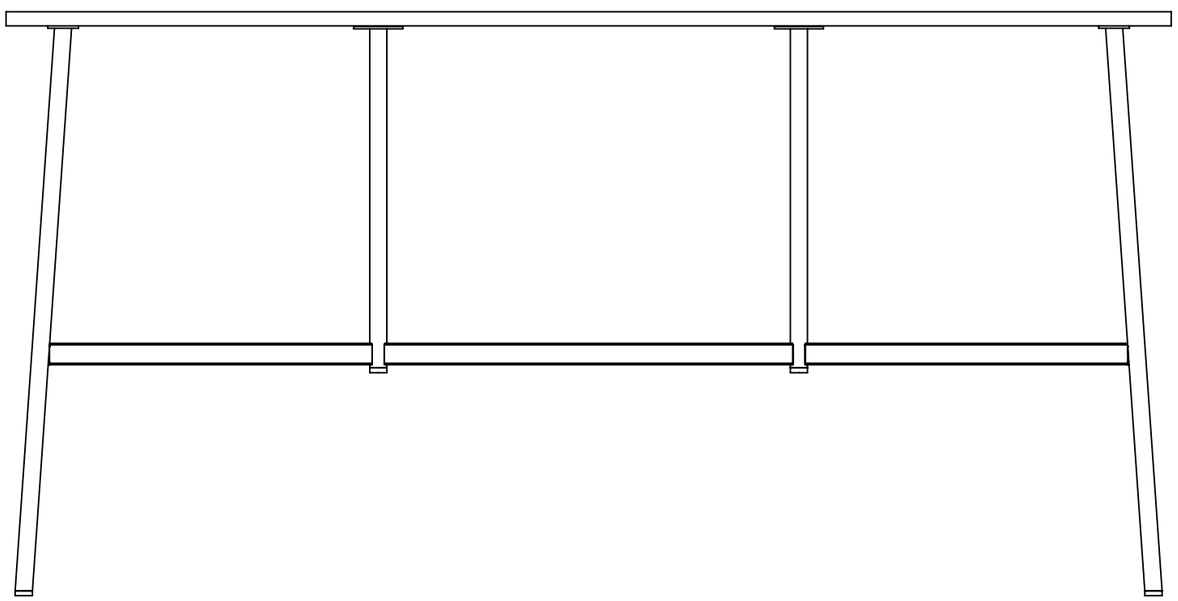

600
1900