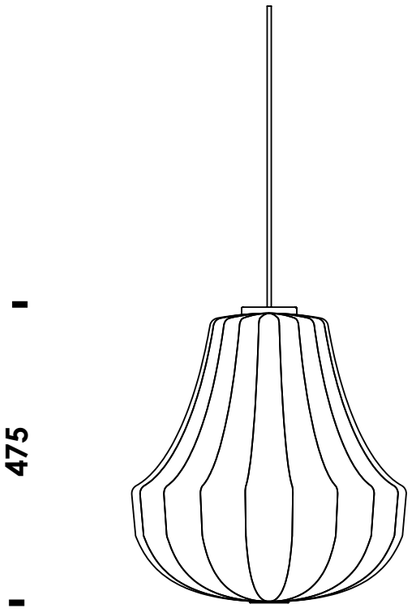
475

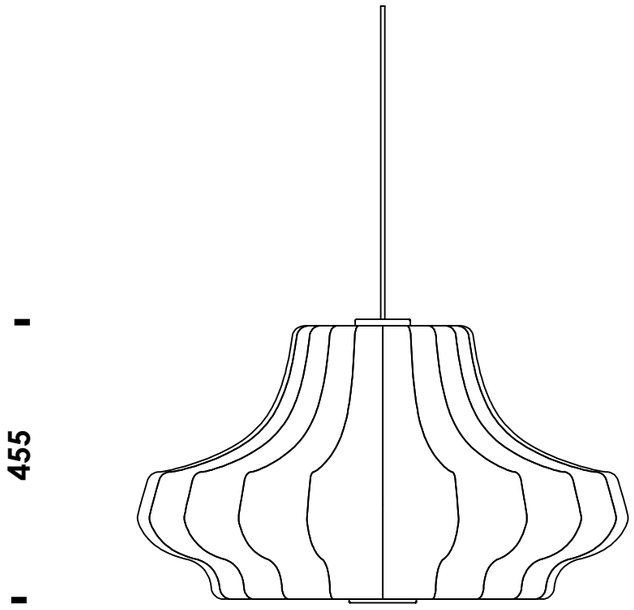
455

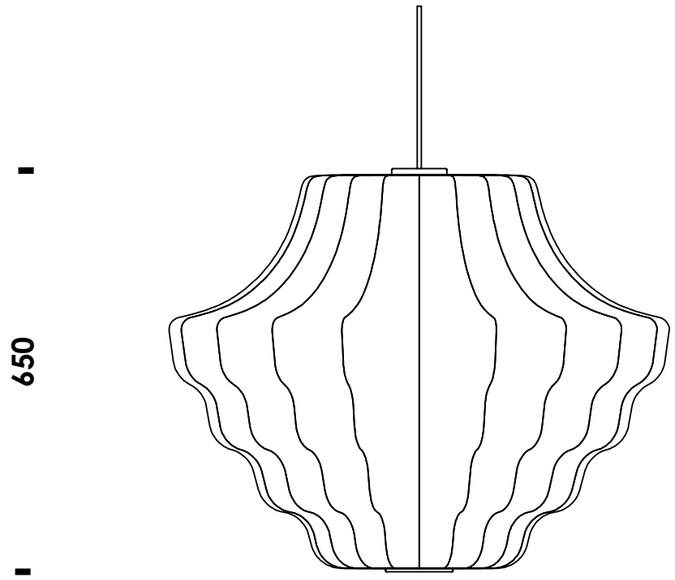
650

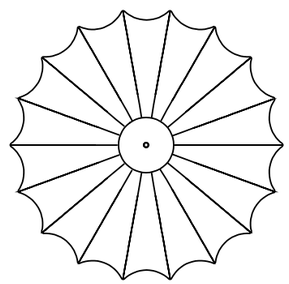
∅450

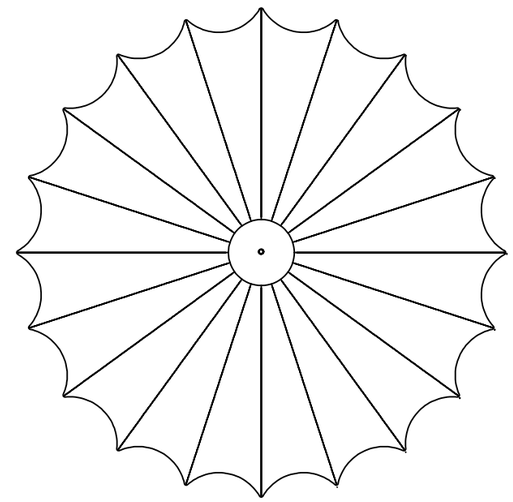
∅800

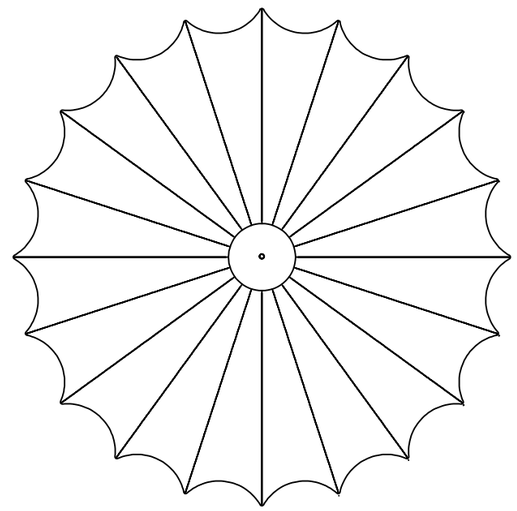
∅815