Lunar Table

Assembly instructions

normann

COPENHAGEN

1

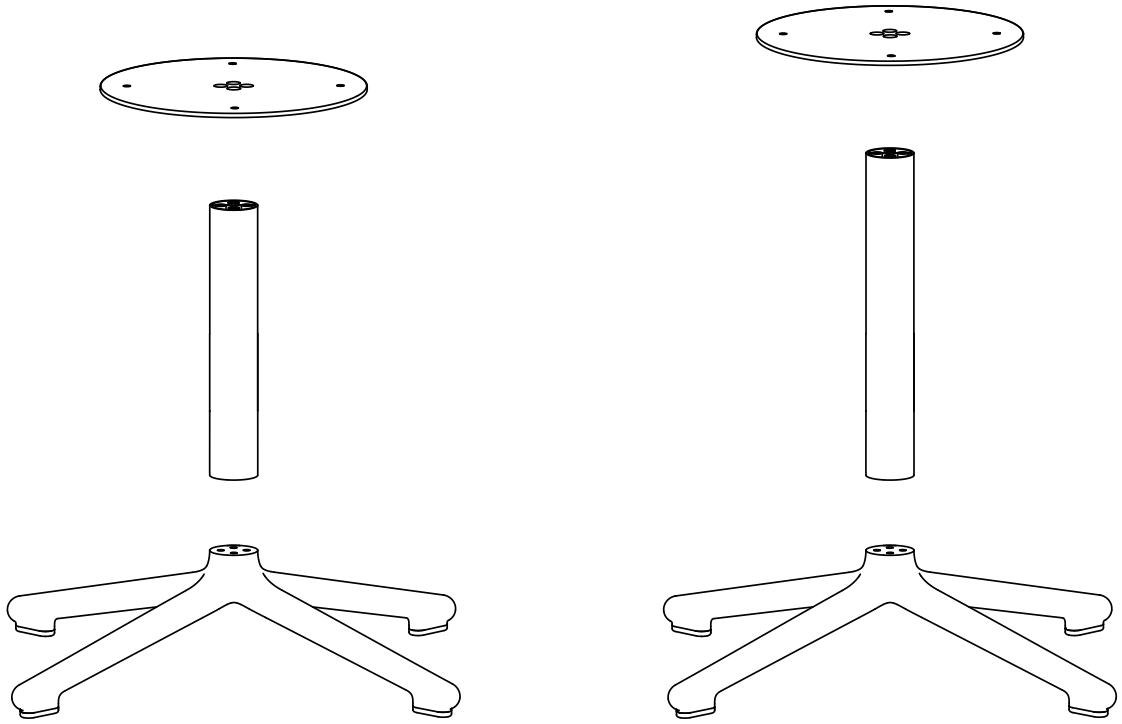

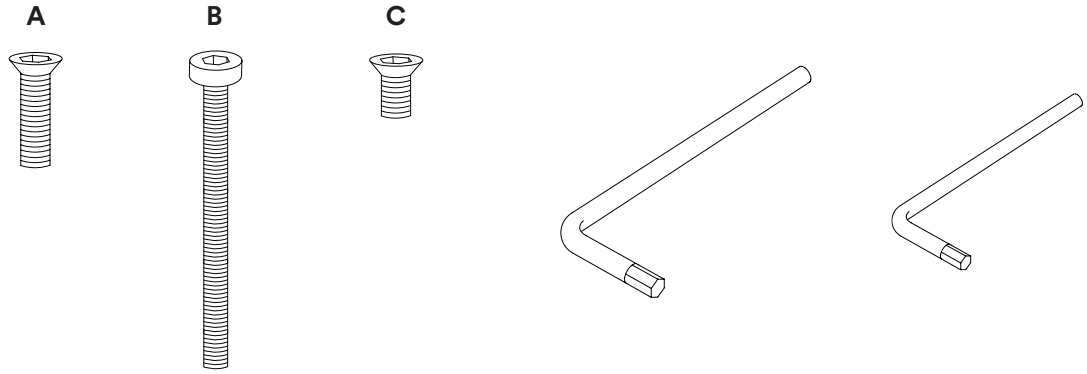

x4 x4 x4 x1 x1

2

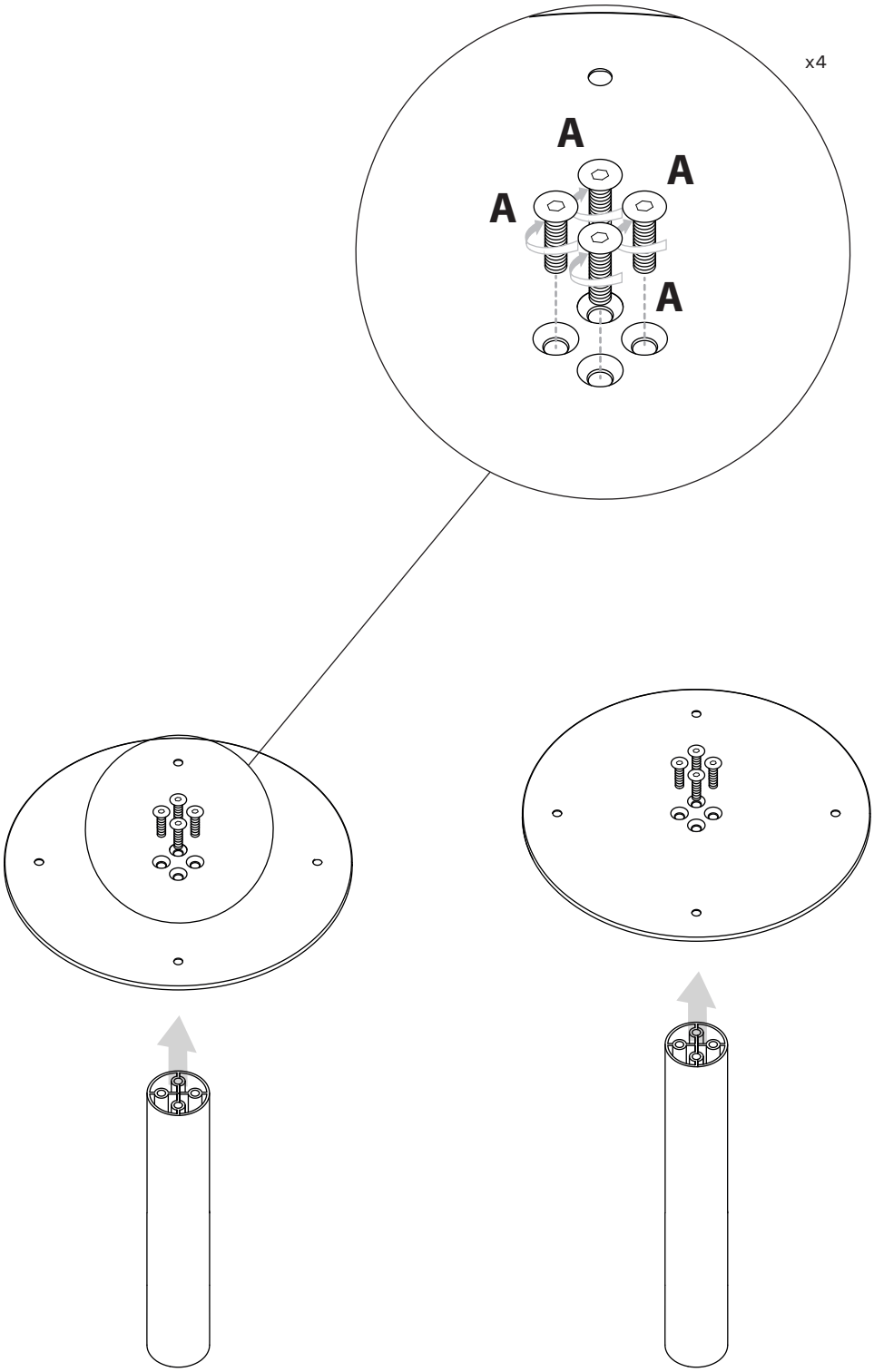

3

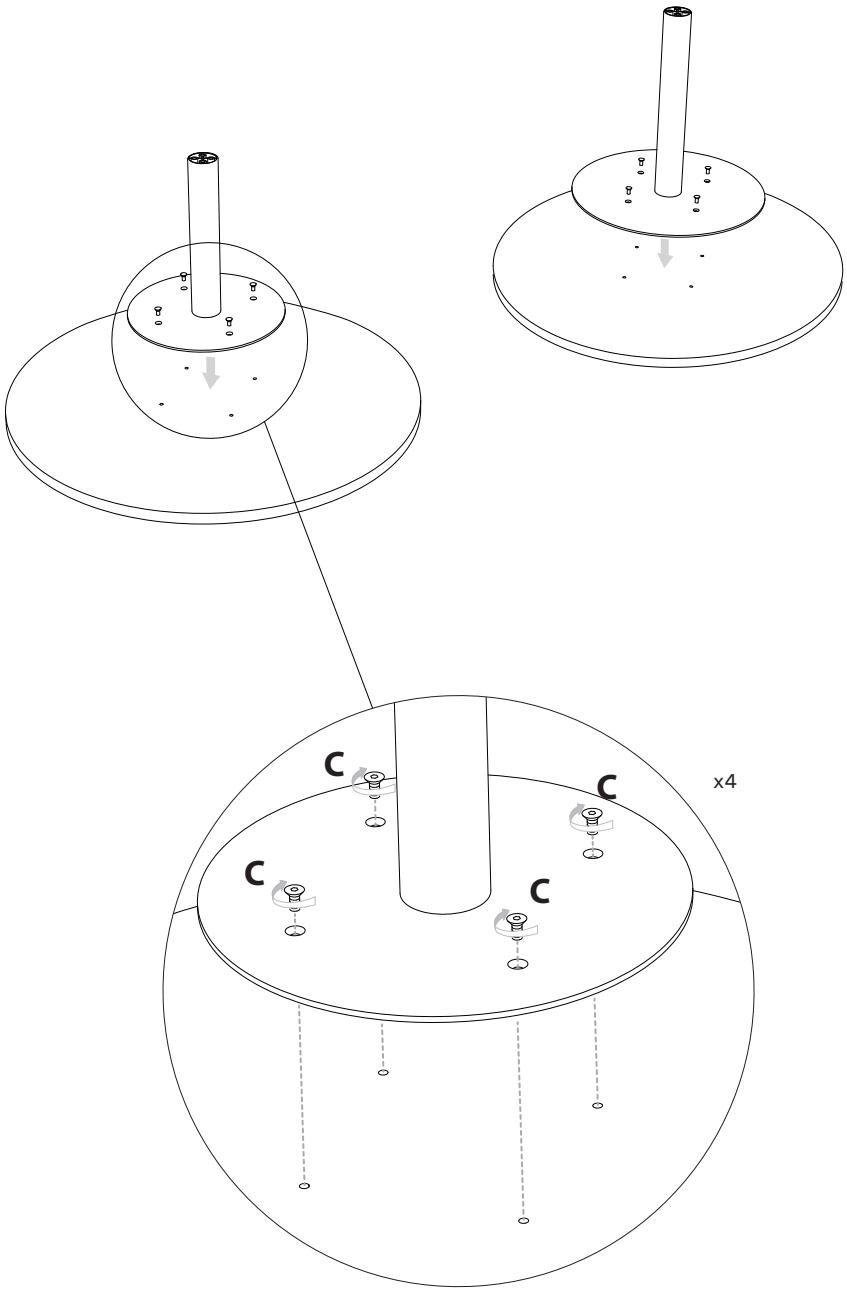
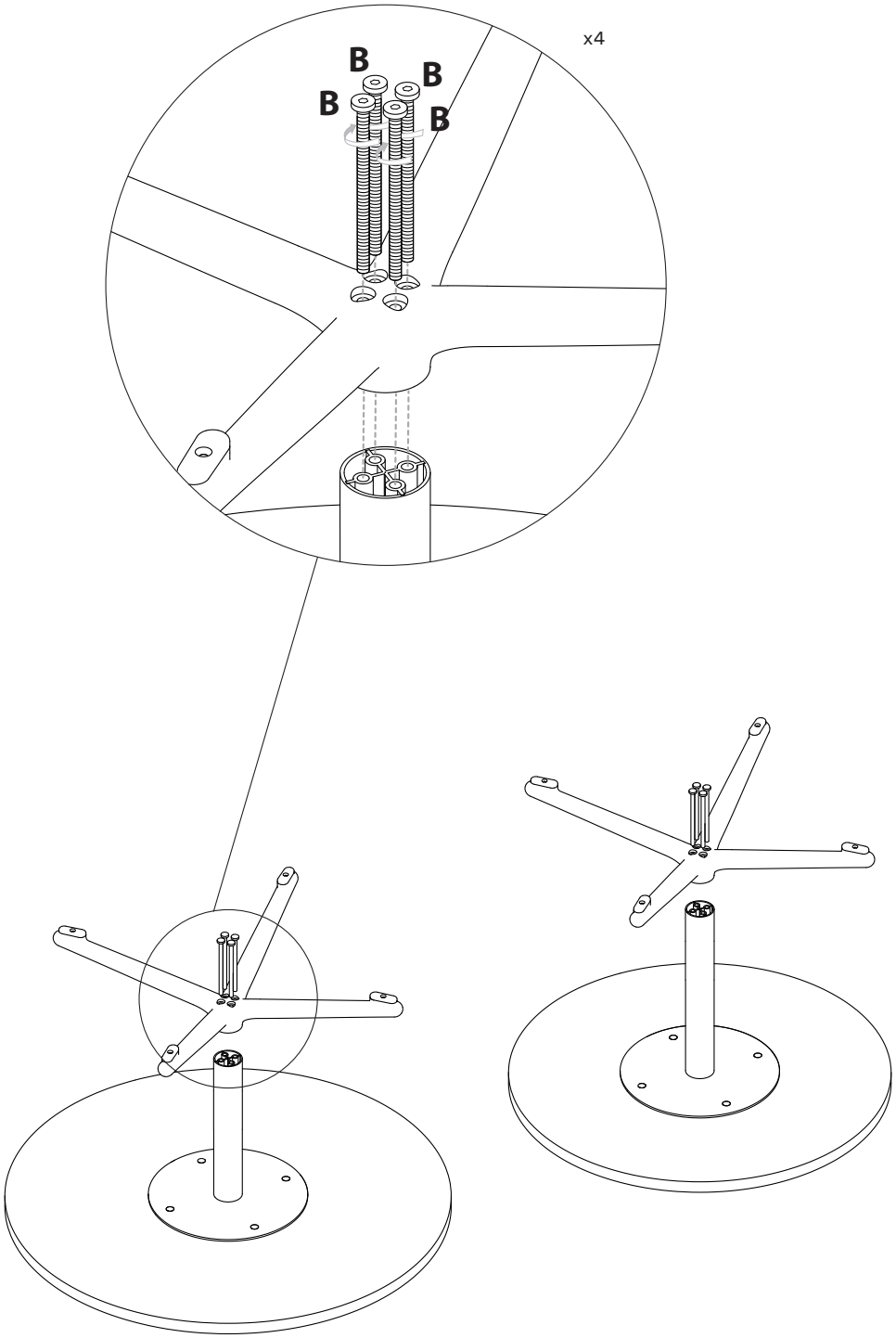
4