normann

COPENHAGEN

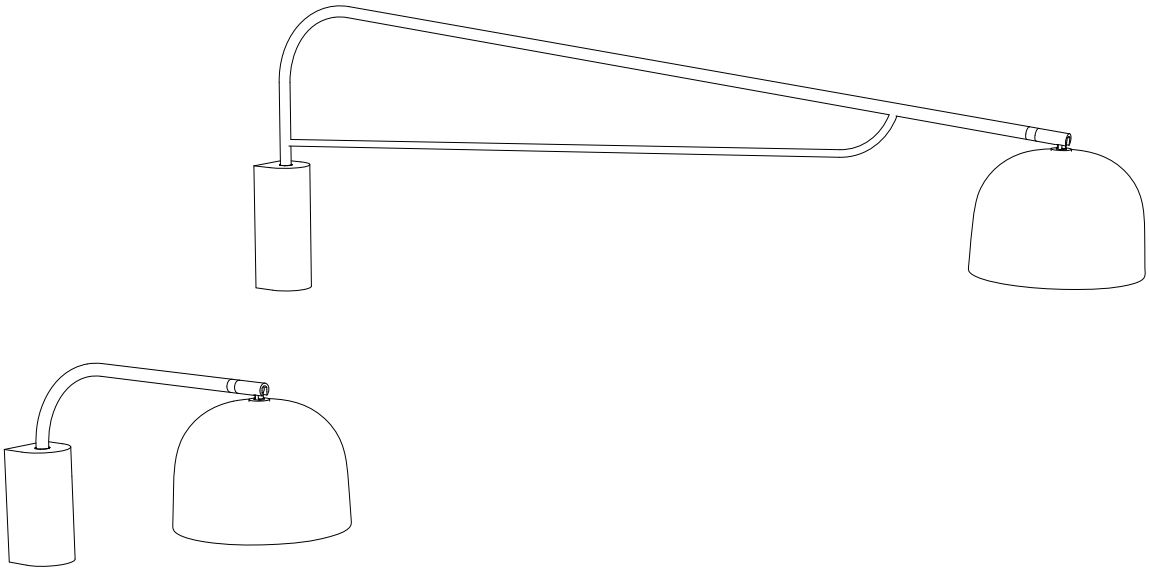

GRANT
ASSEMBLY INSTRUCTIONS

ENGLISH
IMPORTANT!
Always shut off power to the circuit before starting installation work. In some coun-tries electrical installation work may only be carried out by a authorised electrical contractor. Contact your local electricity authority for advice.

DEUTSCH
WICHTIG!
Vor der Installation den Strom abschalten. In einigen Ländern dürfen Elektroinstal-lationen nur von autorisierten Elektrofa-chleuten ausgeführt werden. Im Zweifels-fall die örtlichen Behörden ansprechen.

FRANÇAIS
ATTENTION!
Toujours couper l'alimentation au panneau principal avant de procéder à l'installation. Dans certains pays, l'installation doit être en savoir plus, contacter les autorités locales compétentes en la matière.

NEDERLANDS
BELANGRIJK!
Schakel de stroom altijd uit voordat met de installatie wordt begonnen. In sommige landen mogen elektrische installaties alle-en worden uitgevoerd door een bevoegd elektricien. Neem daarom contact op met de plaatselijke overheid voor advies.

DANSK
VIGTIGT!
Sluk altid for strømmen, før installationen påbegyndes. I nogle lande må elektriske installationer kun udføres af en uddannet elektriker. Få oplysninger hos de relevante myndigheder.

ÍSLENSKA
MIKILVÆGT
Sláið rafmagnið úr áður en uppsetning hefst. Í sumum löndum þarf uppsetning að vera framkvæmd af löggiltum rafvirkja. Leitið ráða hjá rafvirkja varðandi uppsetninguna.

NORSK
VIKTIG!
Elektriske installasjoner skal utføres av elektriker. Steng av strømtilførselen til strømkretsen med riktig sikring før instal-lasjonsarbeidet påbegynnes.

SUOMI
TÄRKEÄÄ!
Katkaise aina virta pääkatkaisimesta en-nen asennuksen aloittamista. Joissakin maissa asennuksen saa tehdä ainoastaan ammattitaitoinen sähköasentaja. Ota selvää paikallisista määräyksistä.

normann
COPENHAGEN

GRANT WALL LAMP - ASSEMBLY MANUAL

1

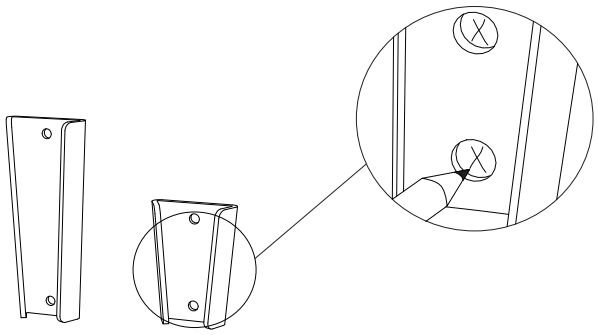

2

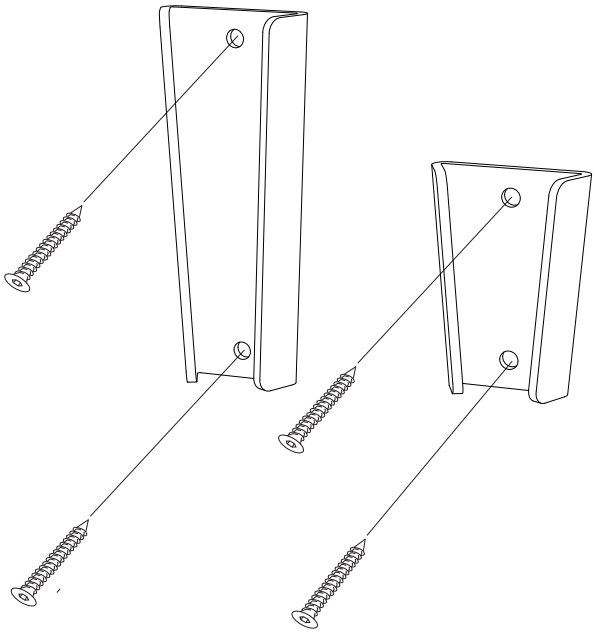

3

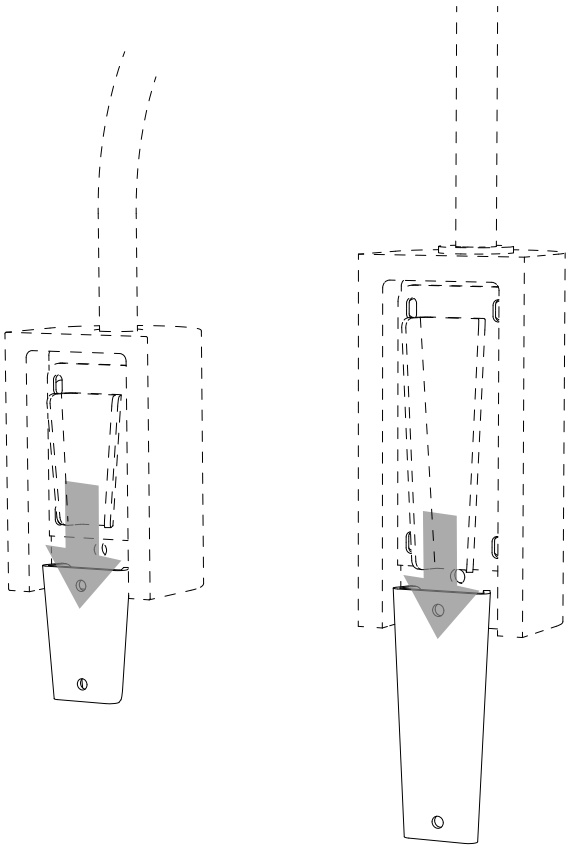

normann
COPENHAGEN

GRANT - CHANGING LAMP BULB MANUAL

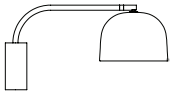

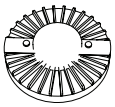

Normann Copenhagen
GX53 4W DC26-36V

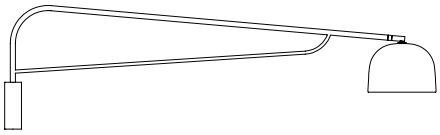

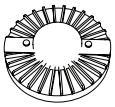

Normann Copenhagen
GX53 4W DC26-36V

WARNING: Only the GX53 Bulb marked with 4W DC 26-36V from Normann Copenhagen can be used for this lamp. Improper use with other light bulbs will cause damage or risk of fire.

I

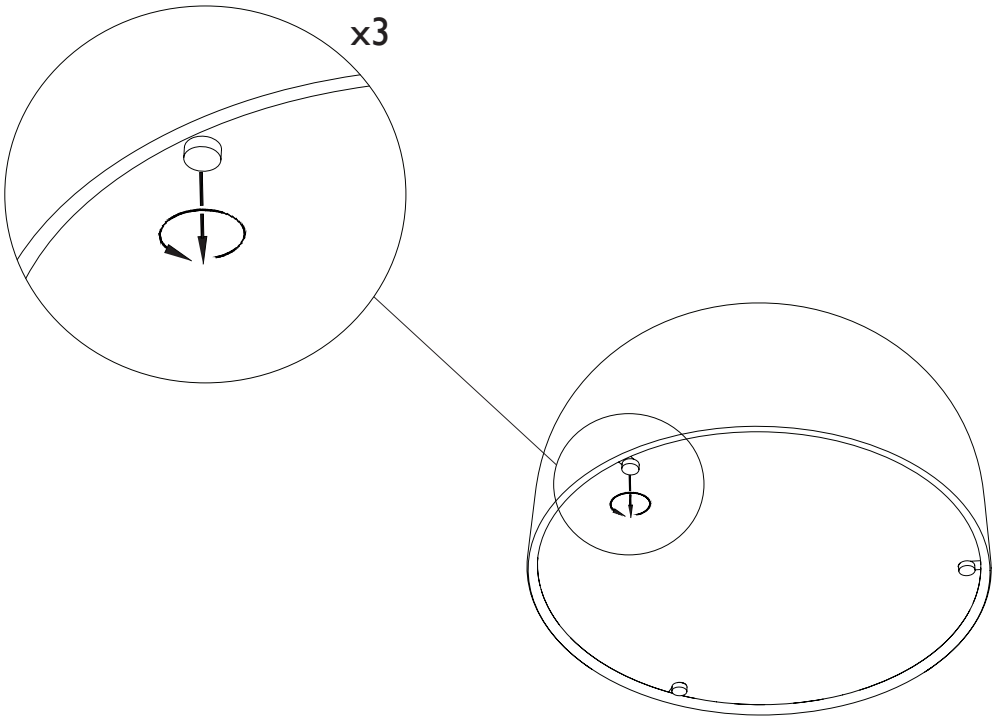

normann
COPENHAGEN

GRANT - CHANGING LAMP BULB MANUAL

2

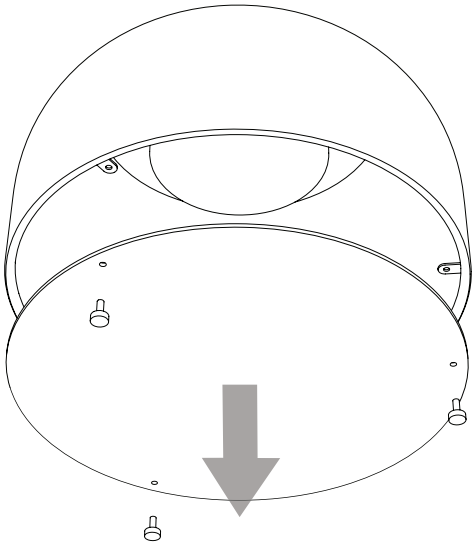

3

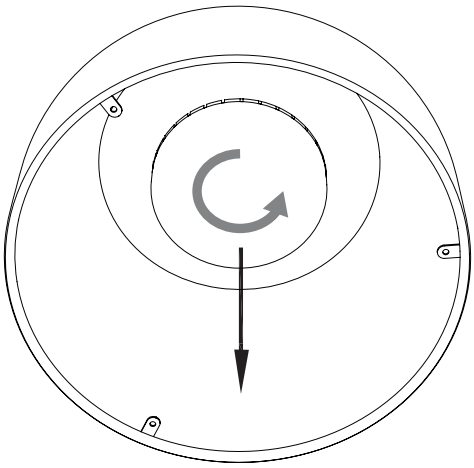

4

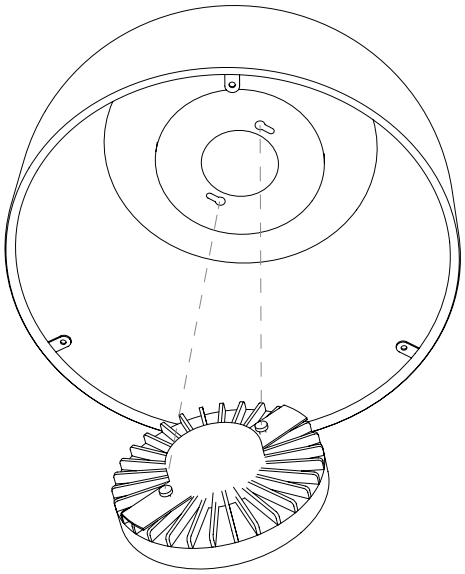

5

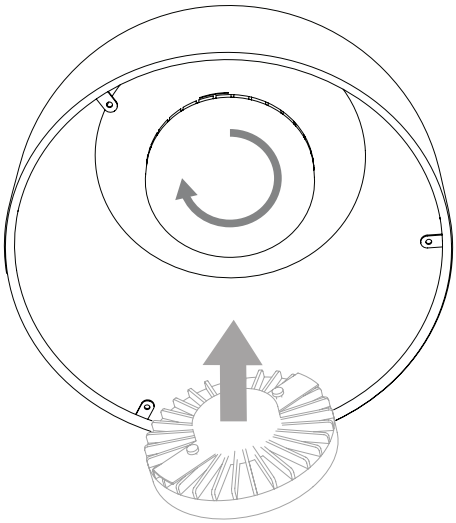

normann
COPENHAGEN

GRANT - CHANGING LAMP BULB MANUAL

6

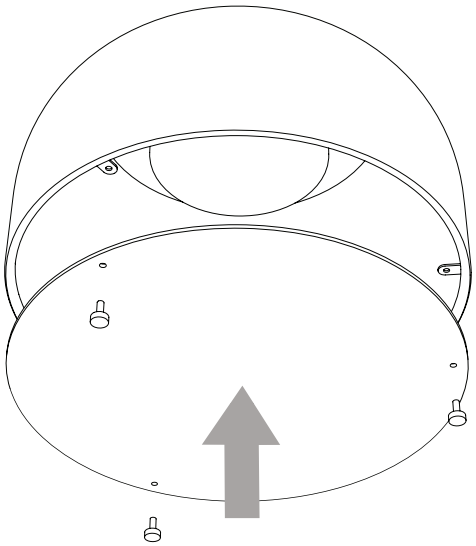

7

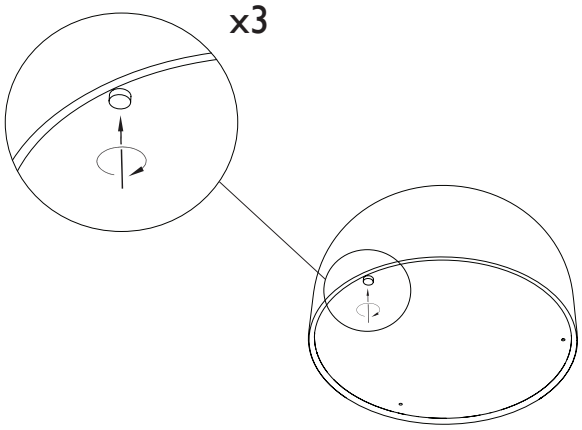

8

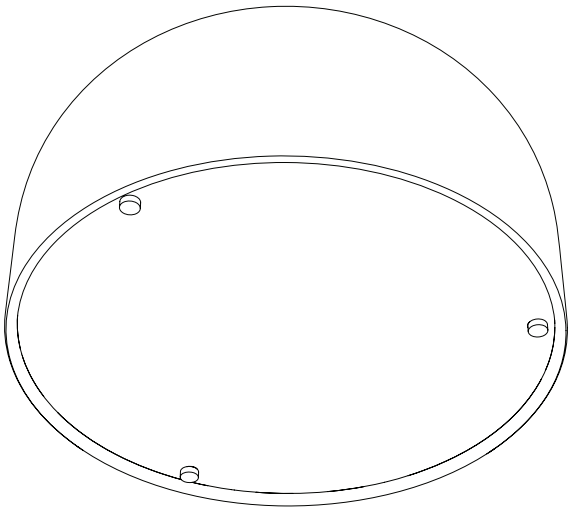

SAFETY INSTRUCTIONS

Please note the information contained in these instructions and save this manual, also when lamp is already mounted.

General instructions:

- Electrical connections may only be carried out by qualified staff.
- The manufactures do not accept responsibility for injuries or defects caused by improper use of this lamp.
- Attention! Before starting the installation, disconnect the power by turning off the circuit breaker, or by removing the fuse at the fuse box.
- Mind to use this lamp for its predetermined function. For example don't mount indoor lamps in outdoor areas.
- Please check all components are complete before installing.
- Don't cover the lamp.
- Don't connect the lamp to power and don't switch it on when it's in packing.
- Bulbs and transformers get very hot during operating. At improper use there is the risk of fire and by changing the bulb you can hurt yourself. Always let cool down!
- If the external flexible cable or cord is damaged, it shall be exclusively replaced by the manufacturer or his service agent or a similar qualified person in order to avoid a hazard.
- Please ensure that the specified bulb type and power of bulb is used. the maximal wattage shouldn't be exceeded (find the bulb symbol and the "max ...W" on rating label or on lamp).
- Do not mount the lamp on wet or conducting background.
- Make sure that the cables or cords don't get damaged during installation.
- The given main voltage (230V/50Hz) shall not be exceeded.
- Plug and connection elements must be free of tensile strength and torsion force.
- Don't touch bulbs with bare hands.

Maintenance instructions:

- Before cleaning, disconnect the power by turning off the circuit breaker, or by removing the fuse at the fuse box.
- Mind to clean the surfaces of lamp only.
- Wetness shouldn't get in terminal box or to any conducting part.
- Before you start to clean let it cool down for 10 minutes!
- Cleaning with a soft dry cloth only.

Advice for environmental care:

Don't put this article to normal domestic waste after the end of its lifecycle.
You have to bring it to a staging area for electrical wastes.
The materials are recyclable according to their specifications.
With the correct recycling of these materials you can make a significant contribution to environmental protection.
Ask your local authority for next staging area.

CE marking:

By affixing the CE marking to a product, a manufacturer declares that the product meets all the legal requirements for CE marking and can be sold throughout the European Economic Area (EEA).

normann

COPENHAGEN

Normann Copenhagen · Østerbrogade 70
2100 Copenhagen Ø · Denmark · Tlf. +45 35 55 44 59
normann-copenhagen.com · normann@normann-copenhagen.com