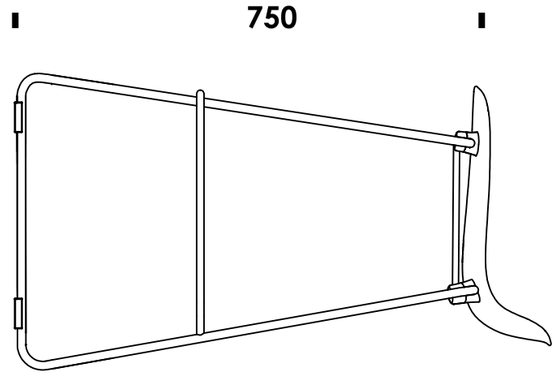
750

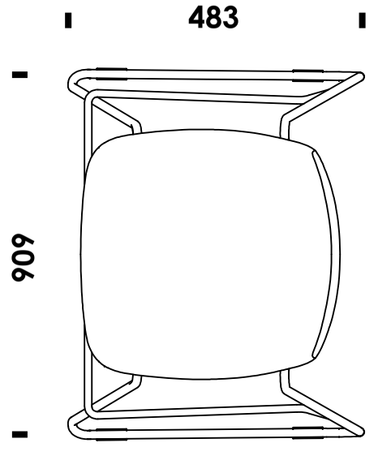
483
906

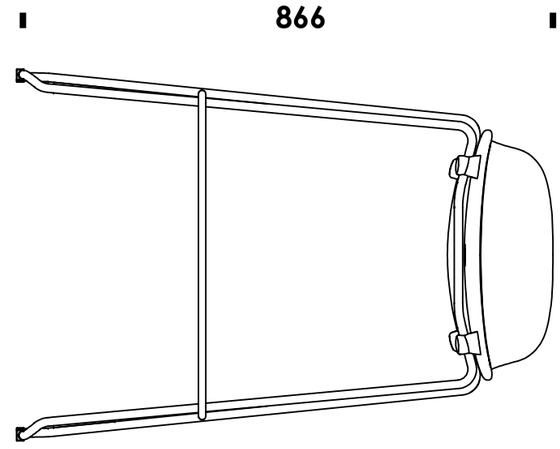
866